Installation Instructions

Eibach Springs, Inc. • 264 Mariah Circle • Corona, California 92879-1751 • USA • Tech Support 800-222-8811 Ext 114

PRO-UTV #E85-212-004-02-22

Kit Contents	Description	Part Number	Qty
	Front Main Spring	1600.300.0250S	2
	Front Secondary Spring	0800.300.0250S	2
	Rear Main Spring	2000.375.0300S	2
	Rear Secondary Spring	1200.375.0200S	2
	Information Kit	EPAK	1
	Instructions	PRO.UTVINST	1

NOTES: Read All Instructions Before Beginning Installation

- **Only qualified technicians experienced in the installation and removal of suspension components should perform this installation.**
- **Use of a hoist and screw jack is highly recommended and will substantially reduce installation time.**
- **Never work on or under a vehicle unless it is properly supported.**

RECOMMENDED FRONT SET-UP

1. Raise the front of the vehicle until the wheels are off the ground and the suspension is fully unloaded, then, remove the front wheel. **Note: Never work on or under a vehicle that is not supported by the proper safety equipment.**

Photo 1

Photo 2

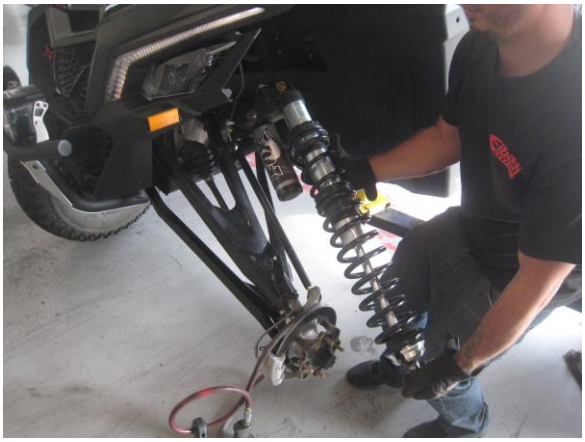

Photo 3

2. Loosen and remove the hardware that secures the coilover to the upper mount and the lower control arm, then, remove the coilover as shown. **(See Photos 1, 2 & 3)**

Photo 4

Photo 5

Photo 6

3. Fully loosen the preload collars, and pry downward on the bump stop, then, remove the OE spring retainer. **(See photos 4, 5 & 6)**

Photo 7

Photo 8

Photo 9

4. You can now remove the OE springs and slider as shown. **(See Photos 7, 8 & 9) Note: The OE slider will be re-used for the installation.**

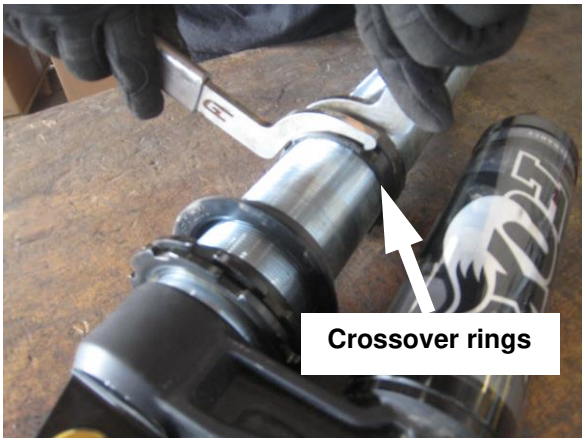

Photo 10

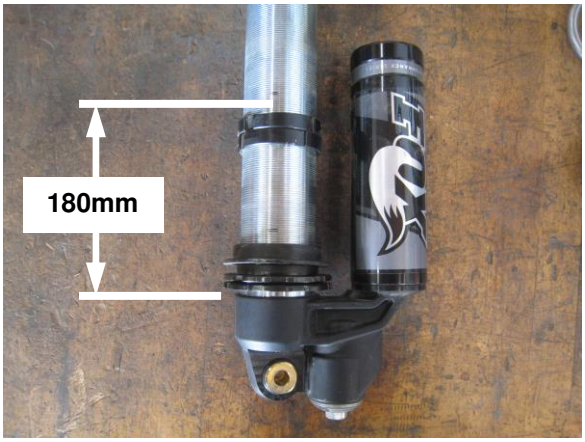

Photo 11

5. Loosen, then, set the OE crossover rings at **180mm**. **(See Photos 10 & 11)**

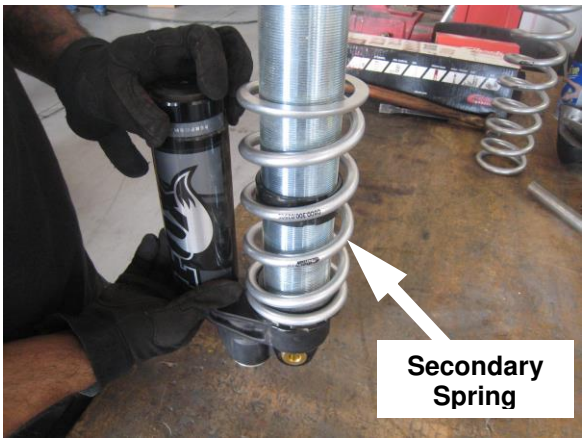

Photo 12

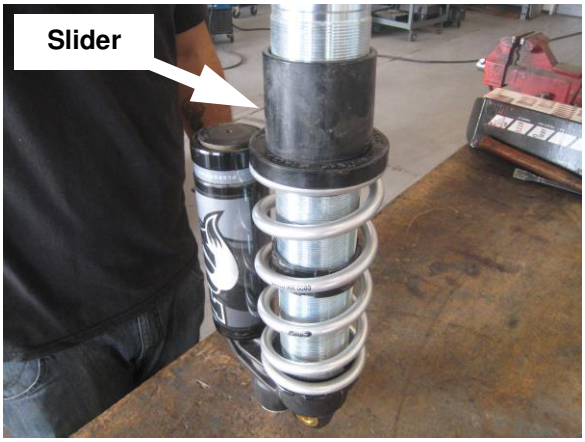

Photo 13

Photo 14

6. With the preload collar at full low, install the secondary spring, OE slider, and main spring as shown. **(See Photos 12, 13 & 14)**

Photo 15

Photo 16

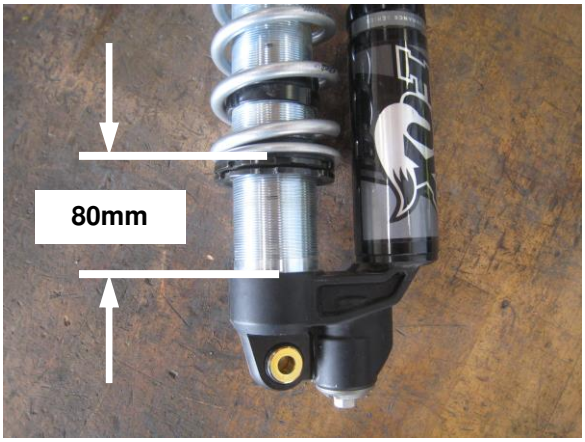

Photo 17

7. You can now reinstall the OE spring retainer, then, adjust/set the preload collars to **80mm** as shown. **(See Photos 15, 16 & 17)**

Photo 18

Photo 19

Photo 20

8. You can now reinstall the coilover, and secure it using the OE hardware as shown. **(See Photos 18, 19 & 20)**

9. Repeat the process on the opposite side, then, reinstall the front wheels, set the vehicle on the ground, and roll it back and forth, making sure it's fully settled.

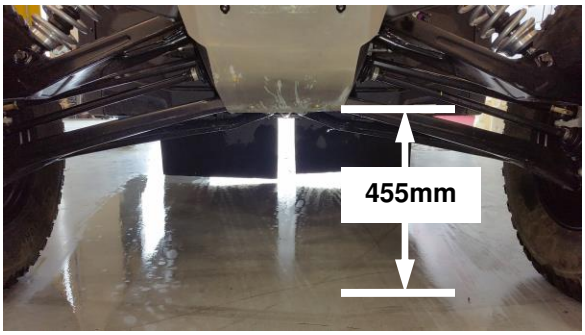

Photo 21

10. Adjust the upper preload collars to adjust the ride height. The recommended preload measurement in **step 7, photo 17,** will get the vehicle close to the recommended ride height, but each vehicle may vary some. We recommend setting the ride height to **455mm** measuring from the ground to the bottom of the skid plate as shown above **(See Photo 21) Note: If running a larger overall wheel/tire combination, you may need to adjust the height accordingly.**

RECOMMENDED REAR SET-UP

1. Raise the rear of the vehicle until the wheels are off the ground and the suspension is fully unloaded, then, remove the rear wheel. **Note: Never work on or under a vehicle that is not supported by the proper safety equipment.**

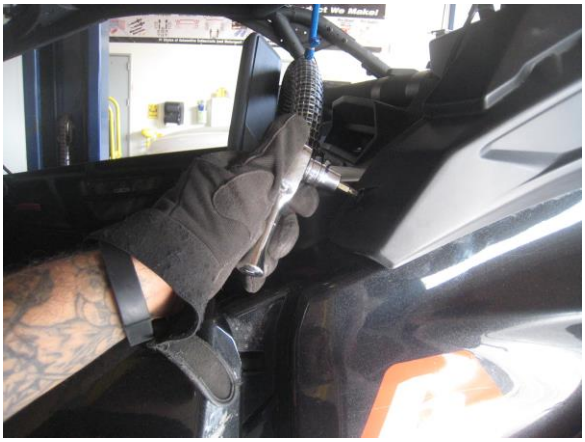

Photo 22

Photo 23

2. Remove the upper dust cover, then loosen and move the hardware that secures the reservoir to the roll cage as shown. **(See Photos 22 & 23)**

Photo 24

Photo 25

Photo 26

Photo 27

3. Loosen and remove the hardware that secures the coilover to the upper mount and lower control arm, then, remove the coilover as shown. **(See Photos 24, 25, 26 & 27)**

Photo 28

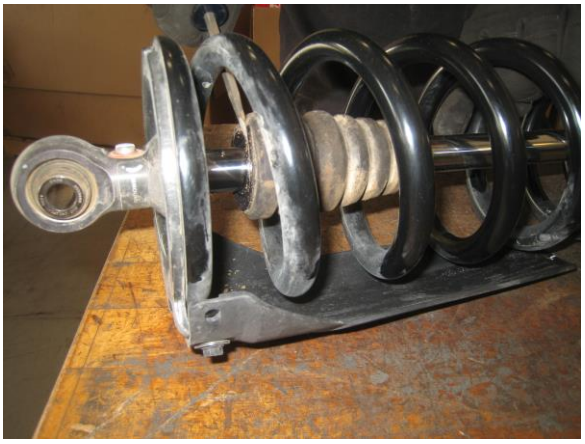

Photo 29

Photo 30

4. Fully loosen the preload collars, pry downward on the bump stop, then, remove the OE spring retainer from the coilover. **(See photos 28, 29 & 30)**

Photo 31

Photo 32

Photo 33

5. You can now remove the main spring, slider and secondary spring as shown. **(See Photos 31, 32 & 33)** **Note: The OE slider will be re-used for the installation of the Eibach UTV springs.**

Photo 34

Photo 35

Photo 36

6. Loosen and remove the OE crossover rings, then, remove the OE spacer and helper spring**. (See Photos 34, 35 & 36) Note: The OE Spacer will not be re-used for the installation.**

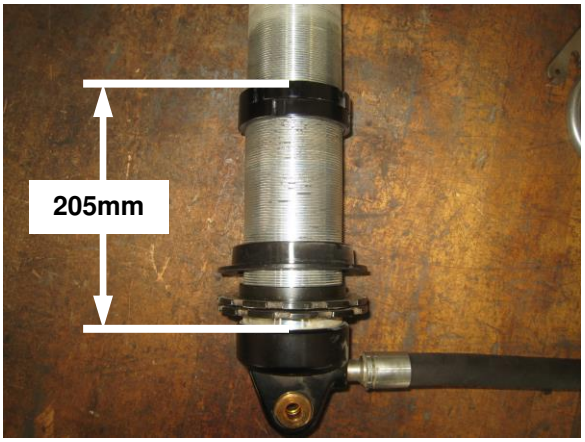

Photo 37

7. Reinstall the OE crossover rings and set the height at **205mm** as shown. **(See Photo 37)**

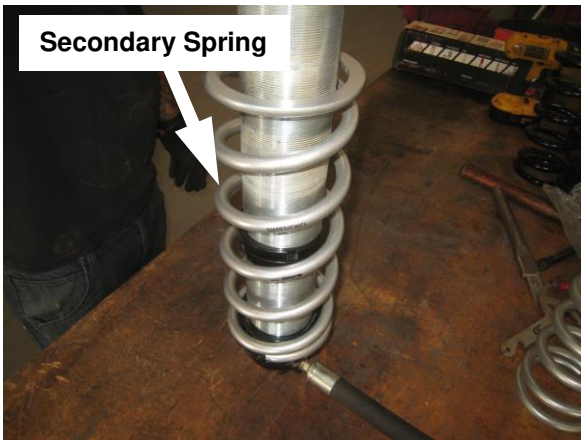

Photo 38

Photo 39

Photo 40

8. You can now install the secondary spring, OE slider, and main spring as shown. **(See Photos 38, 39 & 40)**

Photo 41

Photo 42

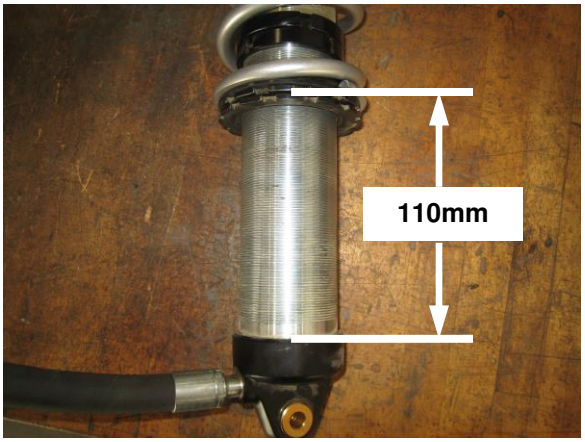

Photo 43

9. Reinstall the OE spring retainer, then, adjust/set the preload collars to **110mm** as shown. **(See Photos 41, 42 & 43)**

Photo 44

Photo 45

Photo 46

10. You can now reinstall the coilover securing it to the upper and lower mounts using the OE hardware. **(See Photos 44, 45 & 46)**

Photo 47

Photo 48

11. Secure the reservoir using the OE bracket and reinstall the dust cover as shown. **(See Photos 47 & 48)**

12. Repeat this process on the opposite side, then, reinstall the rear wheels, set the vehicle on the ground and roll it back and forth, making sure the vehicle is fully settled.

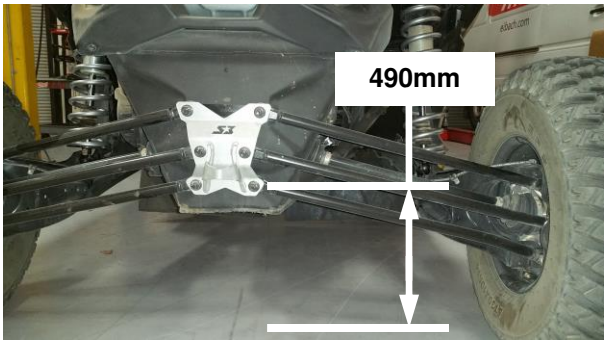

Photo 49

13. You can now adjust the preload collars to adjust the ride height. The recommended preload measurement in **step 9, photo 43,** will get the vehicle close to the recommended ride height, but each vehicle may vary some. We recommend setting the ride height to **490mm** measuring from the ground to the center line of the lower control arm bolt as shown. **(See Photo 49)** **Note: If running a larger overall wheel/tire combination, you may need to adjust the height accordingly.**

RECOMMENDED FRONT AND REAR SHOCK SETTINGS

- **Front:**

  Rebound: 11 clicks out from closed
  High Comp. : 3 turns out from closed
  Low Comp. : 2 turns out from closed

- **Rear:**

  Rebound: 12 clicks out from closed
  High Comp.: 3.5 turns out from closed
  Low Comp.: 1.5 turns out from closed

  Note: These are the recommended shock settings that we tested using the spring rates provided in this kit

Please Note: For more information about the how to tune your suspension visit the following link. http://eibach.com/america/en/motorsport/eibach-ero-eibach-racing-off-road-system-guide